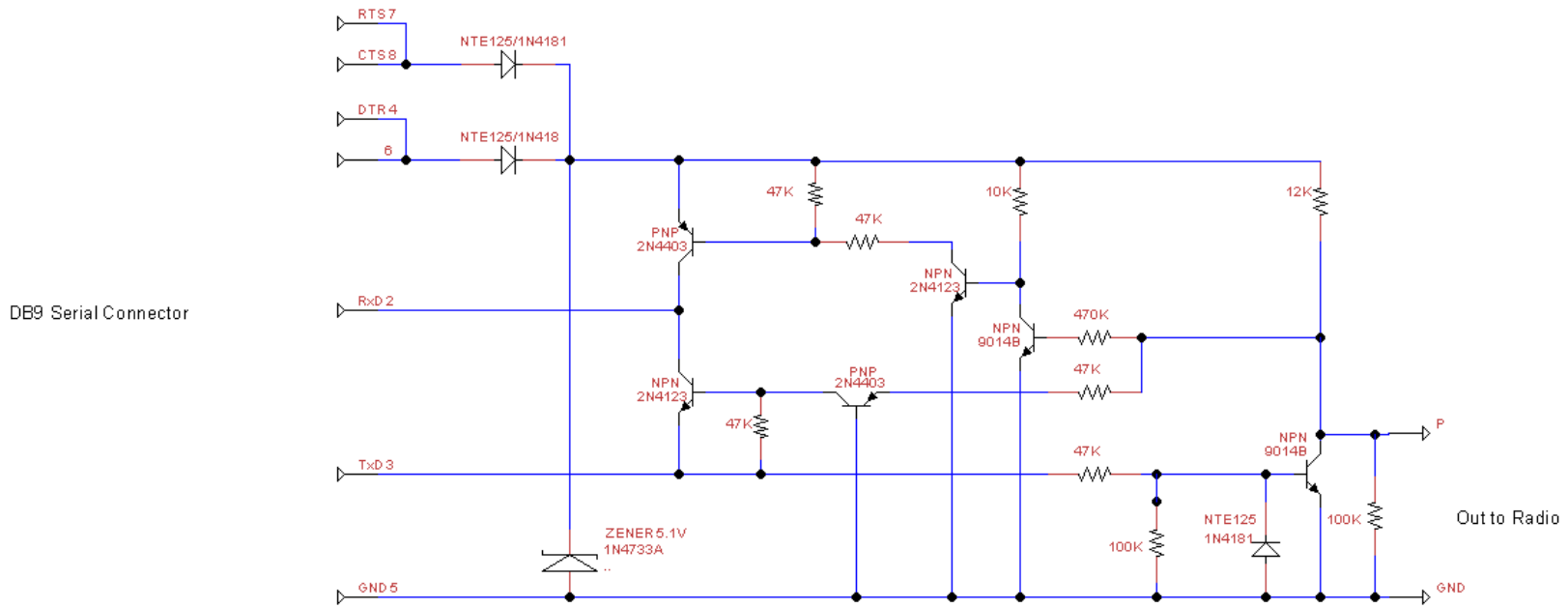


| | | |
|---|---|---|
| Title RST2050 Multi-Radio Programmer Interface | | |
| Author Nicholas Klinger KC9JOY | | |
| File ıgs\Nick\My Documents\rst2050 programmer.dsn | | Document 1 |
| Revision 1.0 | Date July 25, 2007 | Sheets 1 of 1 |